PISCO® Hot NEWS

No, NP 74-02

Parallel Gripper 3-finger

CHT

Best suitable for gripping cylindrical work-pieces

Cylinder I.D. : 34mm or 44mm

2 types of double-acting grippers

>>> https://www.pisco.co.jp/en

Characteristics

Compact body

Space-saving installation

High gripping force generated by circular-piston-drive wedge cam

High repeat accuracy: ± 0.01mm

Sensor switch and EOAT (End of Arm Tooling) mounting flange (non-standard item) optionally available

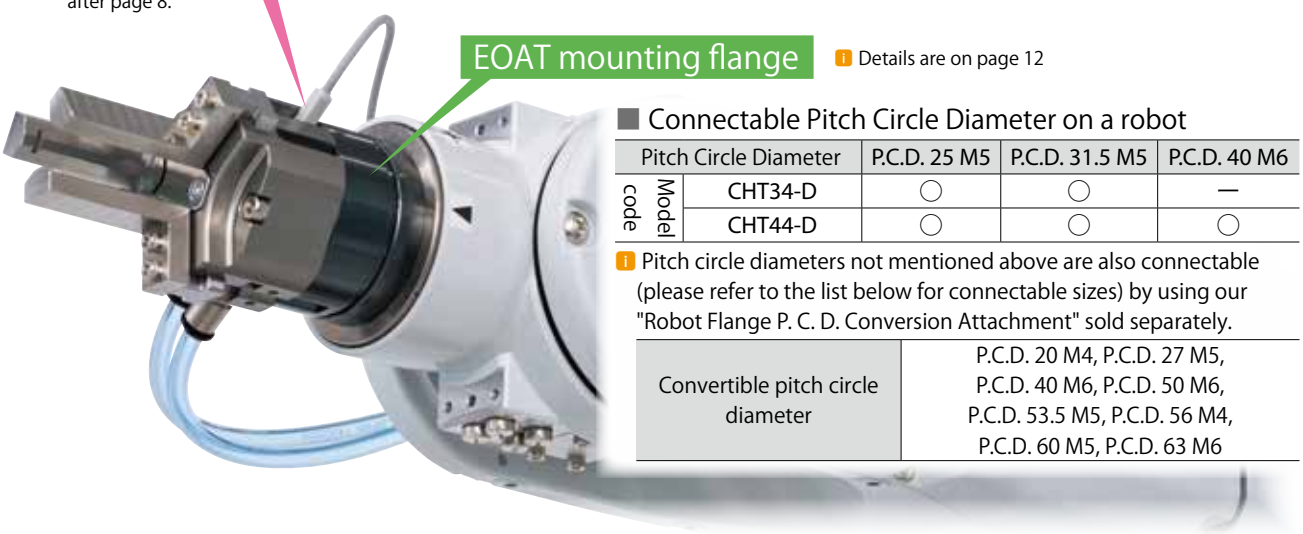

■ Sensor switch wiring & output

Wiring & Output types	No contact, 2 wires	No contact, 3 wires, NPN output	No contact, 3 wires, PNP output

Details are on page 12

■ Connectable Pitch Circle Diameter on a robot

Pitch Circle Diameter		P.C.D. 25 M5	P.C.D. 31.5 M5	P.C.D. 40 M6
Model code	CHT34-D	○	○	—
	CHT44-D	○	○	○

Pitch circle diameters not mentioned above are also connectable (please refer to the list below for connectable sizes) by using our "Robot Flange P. C. D. Conversion Attachment" sold separately.

Convertible pitch circle diameter	P.C.D. 20 M4, P.C.D. 27 M5, P.C.D. 40 M6, P.C.D. 50 M6, P.C.D. 53.5 M5, P.C.D. 56 M4, P.C.D. 60 M5, P.C.D. 63 M6

Directly mountable to an end of arm tooling

No thread connection from gripper top is necessary for air supply.

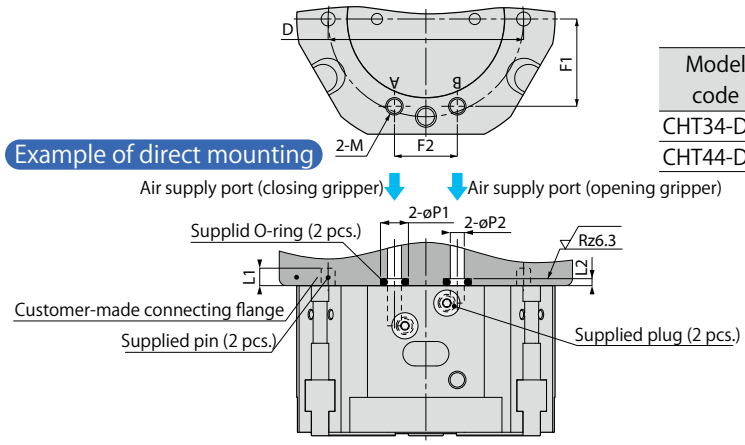

Unit: mm

Model code	M	L1	L2	øP1	øP2	F1	F2	D	O-ring
CHT34-D	M3×0.5	4	0.7	5	3	19	12	45	3×1
CHT44-D	M5×0.8	7	1.2	8	5	25	18	56	5×1.5

Model Designation (Example)

CHT ① | 34 ② | −D ③

① Parallel Gripper with 3-finger

③. Acting type

Code	−D
Acting type	Double-acting

②. Cylinder

Code	34	44
Cylinder dia. (mm)	34	44

Specifications

Model code		CHT34−D	CHT44−D
Acting type		Double-acting	
Cylinder I. D.		34mm	44mm
Finger stroke		4mm (Dia. 8mm)	6mm (Dia.12mm)
Effective gripping force (at 0.6MPa)*	O. D.	97N	198N
	I. D.	114N	209N
Fluid medium		Air	
Operating pressure range		0.2 - 0.8MPa	
Operating temperature range		5 - 80ºC (No freezing)	
Lubrication		Not required	
Repeatability		±0.01mm	
Weight		220g	500g

*) Values at gripping length: 40 mm.

Sectional & structural drawings

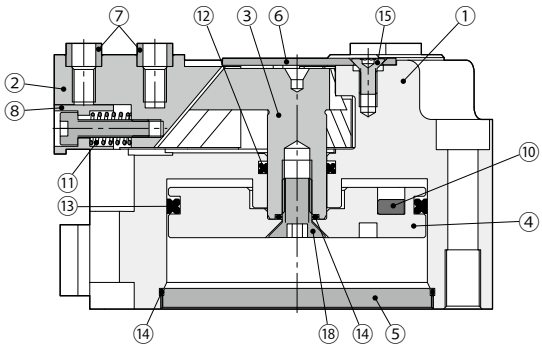

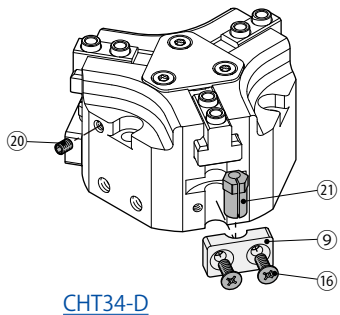

CHT34-D

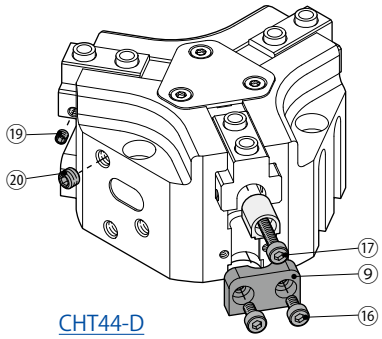

CHT44-D

No.	Parts	Material (surface treatment) CHT34−D	CHT44−D
①	Body	Aluminum	
②	Finger	Carbon steel	
③	Rod	Carbon steel	
④	Piston	Aluminum	
⑤	Cap	Stainless steel	
⑥	Top cover	Stainless steel	
⑦	Bush	Stainless steel	
⑧	Sensor adjustment part	—	Aluminum
⑨	Sensor fixing holder	Aluminum	
⑩	Magnet	Magnet	
⑪	Spring	—	Piano wire
⑫	Rod packing	NBR	
⑬	Piston packing	NBR	
⑭	O-ring	NBR	
⑮	Torx screw	Carbon steel	
⑯	Sensor fixing screw	Stainless steel	
⑰	Hexagon socket head bolt	—	Stainless steel
⑱	Hexagon socket counter-sunk head screw	Stainless steel	
⑲	Hexagon socket set screw	—	Stainless steel
⑳	Hexagon socket set screw	Stainless steel	
㉑	Adjustment socket	Stainless steel	—

Supplied:

			
O-ling (x2)	Plug (x2)	Pin (x2)	Bush (x6)

Effective gripping force

Gripping force of a finger at the gripping length (L) at each operating pressure is as shown in the figures below.

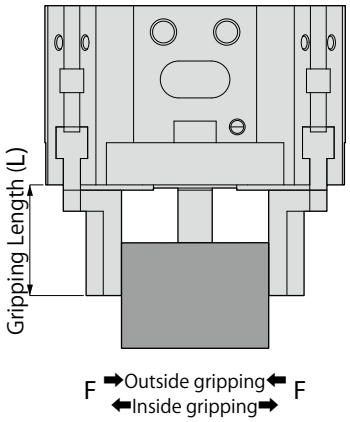

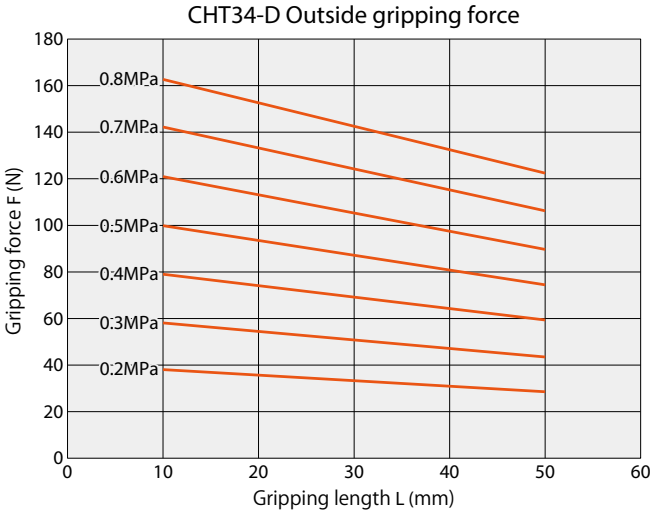

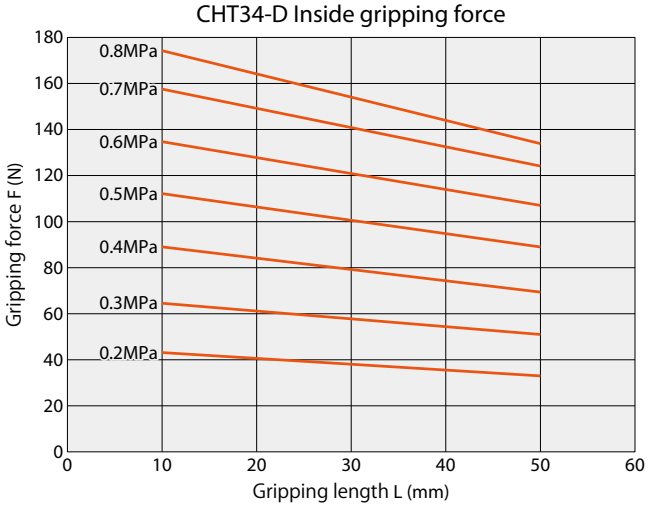

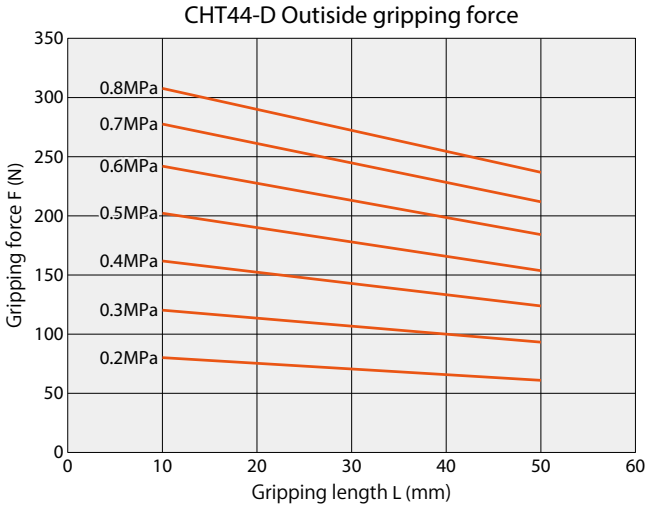

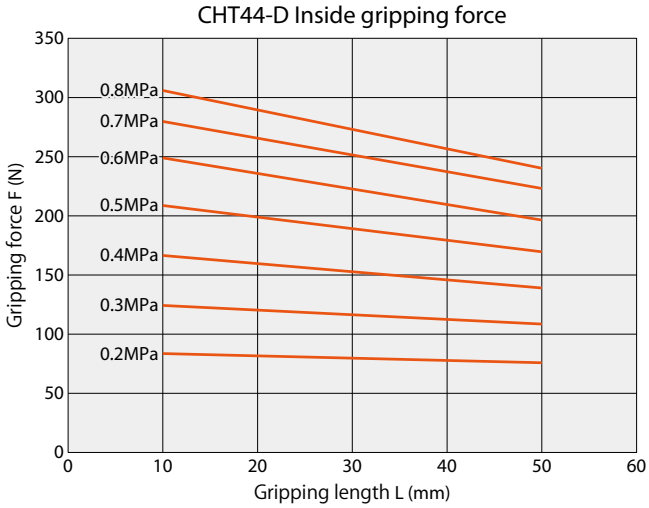

Model selection (Example)

When gripping a work-piece as shown to the right:

F: Gripping force of a finger (N)
n: Number of fingers = (3 fingers)
μ: Friction coefficient between finger attachment and work-piece
m: weight of work-piece (kg)
g: gravitational acceleration (=9.8m/s²)
a: safety factor

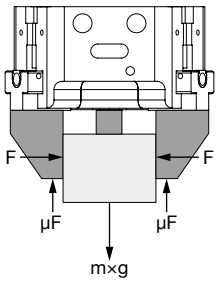

Condition for a work-piece not to fall is

$n \times \mu F > m \times g$

Thus,

$$F \geqq \frac{m \times g}{n \times \mu}$$

Determining F with safety factor as "a," then

$$F \geqq \frac{m \times g}{n \times \mu} \times a$$

◎ Notes on model selection

1. For use in regular gripping and transfer, we let safety factor (a) be 4.
2. When friction coefficient (μ) is unknown, we regard μ as 0.1 (μ=0.1).
3. Bigger safety factor (a) needs to be estimated when large acceleration will be added on a gripper.

〈Concrete example of model selection〉

Selecting a model under the following conditions: There is no large acceleration nor impact when transferring a work-piece; the work-piece weight for outside gripping (m) is 1.2 kg; operating pressure is 0.5MPa; gripping length (L) is 30mm; and friction coefficient (μ) is 0.1.

Gripping force calculated by the above equation

$$F \geqq \frac{1.2 \times 9.8}{3 \times 0.1} \times 4$$

$$F \geqq 156.8N$$

In the gripping force graph below, CHT44-D can be selected with an operating pressure of 0.5 MPa, gripping length of 30mm, and gripping force of 157N.

CHT44-D Outside gripping force

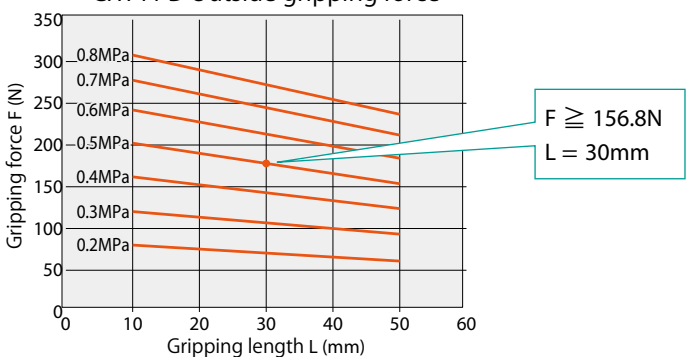

⚠ Safety instructions

〈Parallel Gripper with 3-finger〉

⚠ Notes

1. The gripper has a built-in magnet. Attention is needed when using the gripper in the environment where magnetic material should be avoided (such as piled-up iron powder, peripheral sensors or work-pieces).
2. Refer to the tightening torque table below when installing a gripper. Improper tightening may cause malfunctions, shorter product life time, or loosning.

Screw size	Tightening torque (N·m)
M4×0.7	1.5
M5×0.8	2.9
M6×1	5.2

3. Install a gripper on flat surface. If the installation surface is not flat, the gripper cylinder may get deformed.
4. See the table to the right for maximum allowable moment and allowable load on fingers. Exceeding the values listed may cause damage to the gripper.

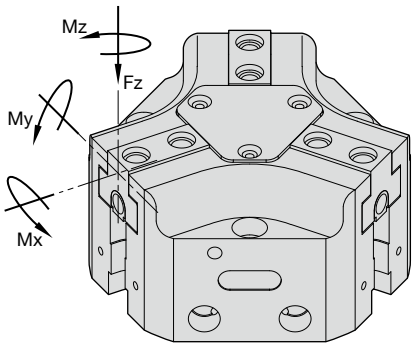

Model code	Mx max. (N·m)	My max. (N·m)	Mz max. (N·m)	Fz max. (N)
CHT34-D	15	15	8	700
CHT44-D	50	45	35	1,200

Exterior dimensional drawings

Model code: CHT34−D

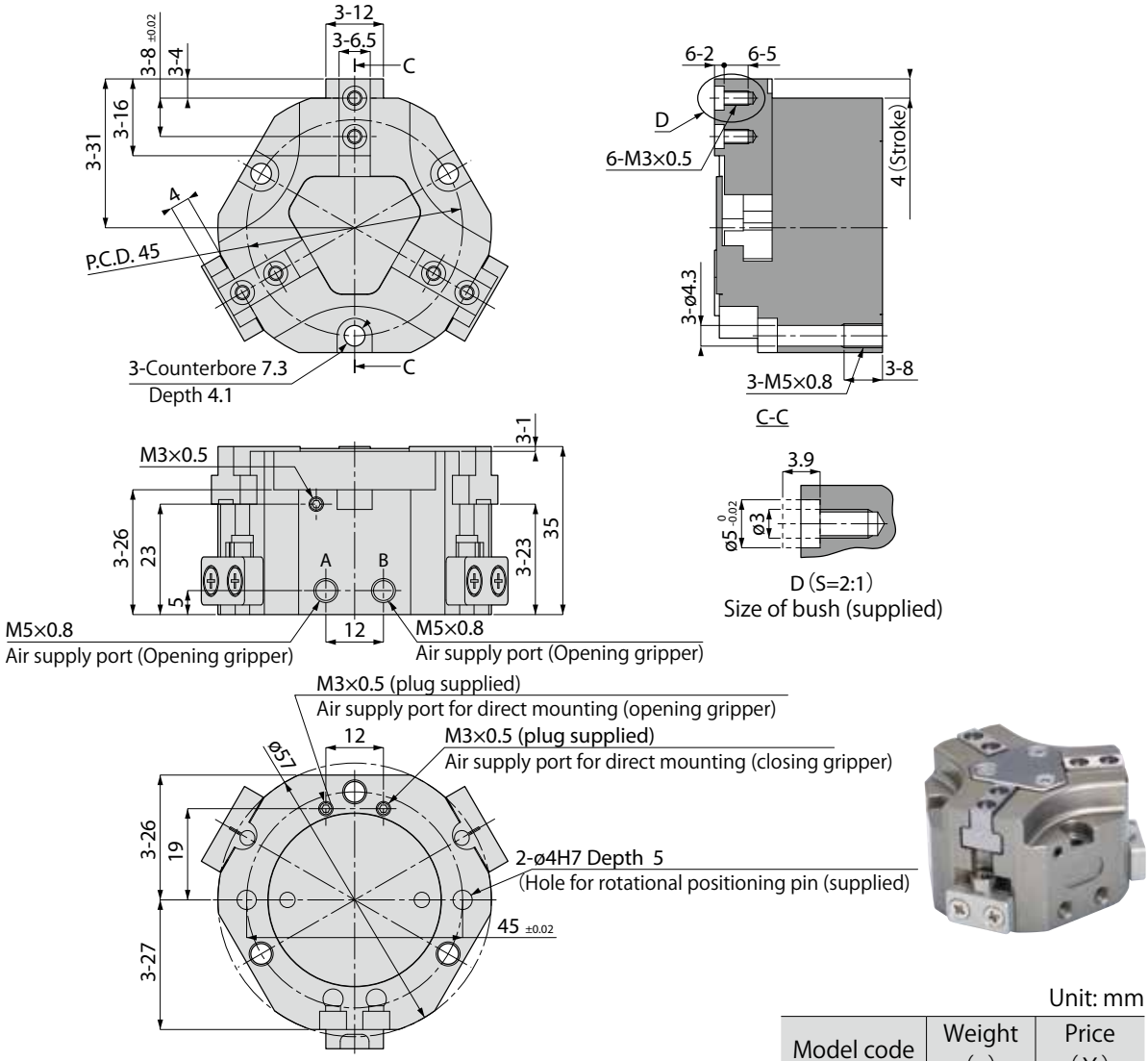

Unit: mm

Model code	Weight (g)	Price (￥)
CHT34-D	220	46,000

Supplied:

Parts	O-ring (x2)	Plug (x2)	Pin (x2)	Bush (x6)
Intended use	For direct mounting. Act as a seal between customer-made flange and gripper's air supply port.	For direct mounting. To plug the air supply port on the side of gripper.	Rotational positioning pin to prevent positional displacement.	To prevent positional displacement of customer-made jaw and finger.

Model code: CHT44−D

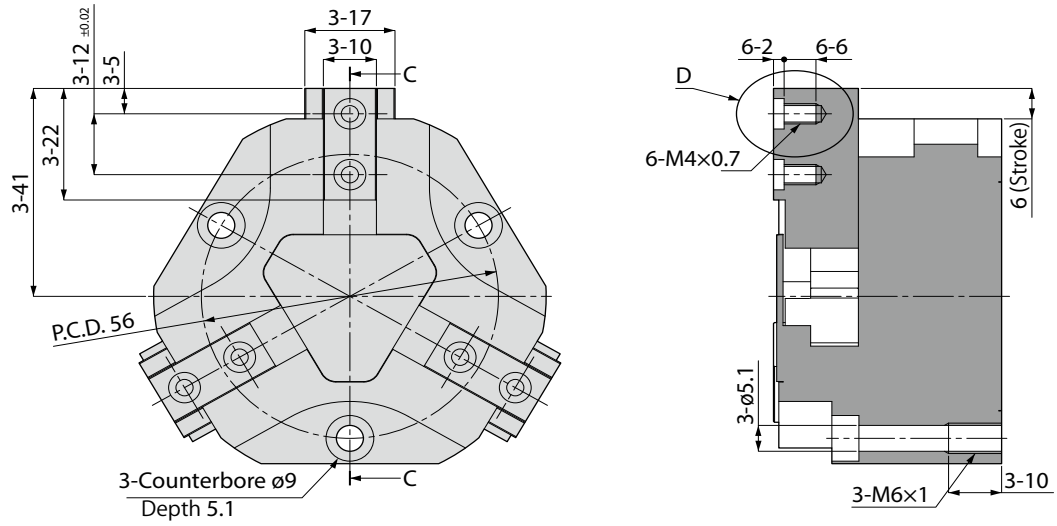

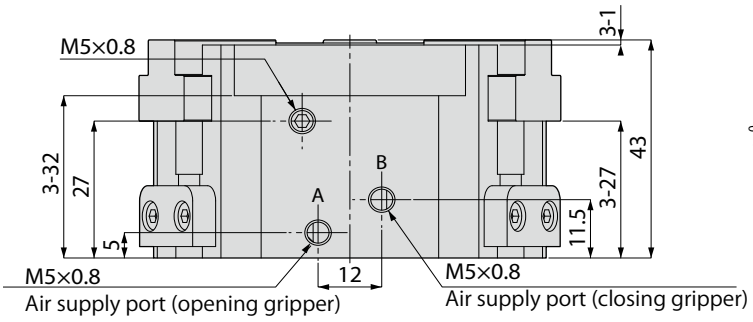

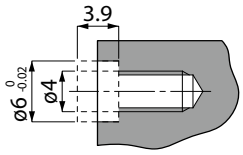

D (S=2:1)
Bush (supplied) size

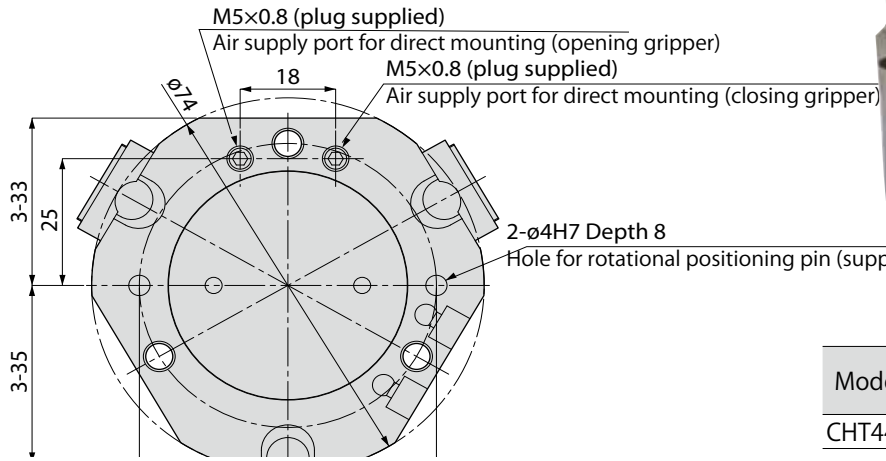

Unit: mm

Model code	Weight (g)	Price (￥)
CHT44-D	500	49,500

Supplied:

				
Parts	O-ring (x2)	Plug (x2)	Pin (x2)	Bush (x6)
Intended use	For direct mounting. Act as a seal between customer-made flange and gripper's air supply port.	For direct mounting. To plug the air supply port on the side of gripper.	Rotational positioning pin to prevent positional displacement.	Bush to prevent positional displacement of customer-made jaw and finger.

Sensor Switch Model Designation (Example)

SEM ① | −G ② | D ③ | V ④ | −C100 ⑤

①. Sensor switch

②. Sensor switch type

Code	−G	−F
Type	For CHT34	For CHT44

③.Wiring type

Code	D	N	P
Wiring type	2 wires	3 wires, NPN output	3 wires, PNP output

④.Cable direction

Code	No code	V
Direction	Side	Top

*For CHT34, only TOP is selectable.

⑤. Cable length

Code	−C100	−C200
Length (mm)	1,000	2,000

Specifications of sensor switch

Model code	SEM-GDV 5	SEM-GNV 5	SEM-GPV 5	SEM-FD 5	SEM-FDV 5	SEM-FN 5	SEM-FNV 5	SEM-FP 5	SEM-FPV 5
Wiring type	No contact, 2 wires	No contact, 3 wires		No contact, 2 wires		No contact, 3 wires			
Output types	—	NPN output	PNP output	—		NPN output		PNP output	
Cable direction	Top			Side	Top	Side	Top	Side	Top
Load voltage	DC10 ~ 28V	DC5 ~ 28V		DC5 ~ 30V					
Load current	4 ~ 20mA max.	50mA max.					80mA max.	50mA max.	80mA max.
Current consumption	—	10mA max. (DC24V)		—		10mA max. (DC24V)	6mA max. (DC24V)	10mA max. (DC24V)	6mA max. (DC24V)
Internal voltage drop	3.5V max.	0.5V max. (at 50mA)		3.5V max.		0.5V max. (at 50mA)			
Leakage current	0.8mA max.	0.01mA max.		0.1mA max.		0.01mA max.			
Indicator	ON - Red LED indicator turns on								
Response time	1msec max.								
Operating temp. range	-10 ~ 70℃ (No freezing)								
Impact resistance	490m/s² (Non-repeated)								
Vibration resistance	88.3m/s² (Total amplitude 1.5㎜ , 10~55Hz)								
Protective structure	IP67								
Surge protection circuit	Surge protection	Surge protection, Reverse connection prevention							
Weight	12g (Lead wire: 1,000㎜) 23g (Lead wire: 2,000㎜)			13g (Lead wire: 1,000㎜) 24g (Lead wire: 2,000㎜)					

⚠ Safety instructions

〈Sensor Switch〉

⚠ Notes
1. Connect the lead wires according to their color. Incorrect wiring will cause damage to the sensor switch.
2. Do not give a strong tensile force or extreme bending to the lead wire.
3. To avoid malfunction, keep the sensor away from strong external magnetic fields.
4. Avoid using the sensor switch in environments where chemicals are present.
5. When using multiple (2 or more) 2-wire sensors by AND (series) connection, load failure may occur due to the internal voltage drop corresponding to the connected number of sensors.
6. When connecting 2-wire sensors by OR (parallel) connection, load failure may occur due to the increased current leakage corresponding to the connected number of sensors.

Internal circuit diagram of sensor switch

SEM−GDV, SEM−FD 4

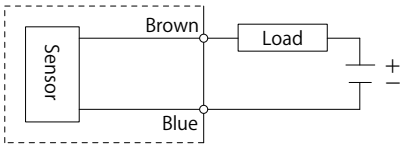

SEM−GNV, SEM−FN 4

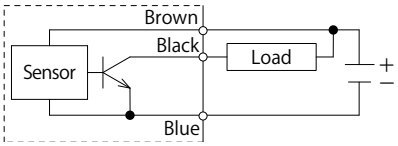

SEM−GPV, SEM−FP 4

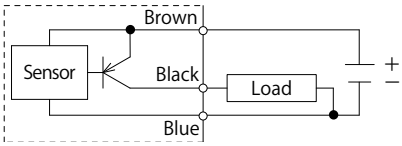

Exterior dimensional drawings of sensor switch

Model code: SEM−G3V5
Cable direction for CHT34: Top Sensor Switch

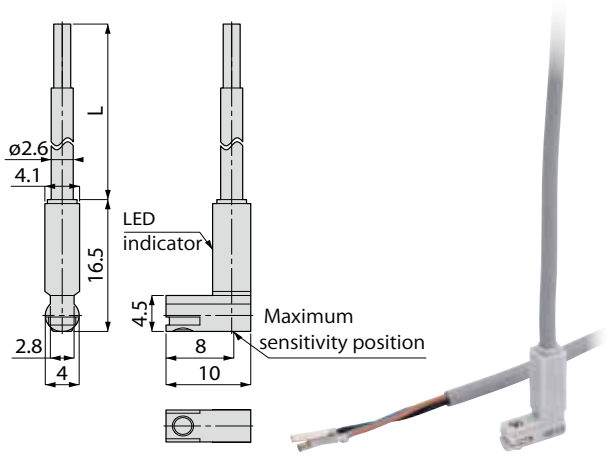

Unit: mm

Model code	Weight (g)		Price (￥)	
	5 : -C100	5 : -C200	5 : -C100	5 : -C200
SEM-GDV5	12	23	2,950	2,950
SEM-GNV5				
SEM-GPV5				

Model code: SEM−F3V5
Cable direction for CHT44: Top Sensor Switch

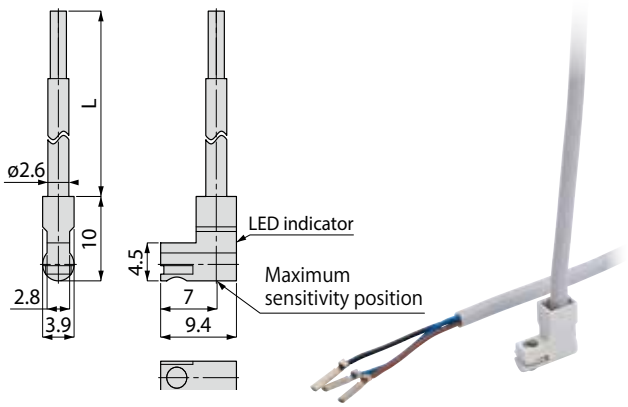

Unit: mm

Model code	Weight (g)		Price (￥)	
	5 : -C100	5 : -C200	5 : -C100	5 : -C200
SEM-FDV5	13	24	2,600	2,600
SEM-FNV5				
SEM-FPV5				

Model code: SEM−F35
Cable direction for CHT44: Side Sensor Switch

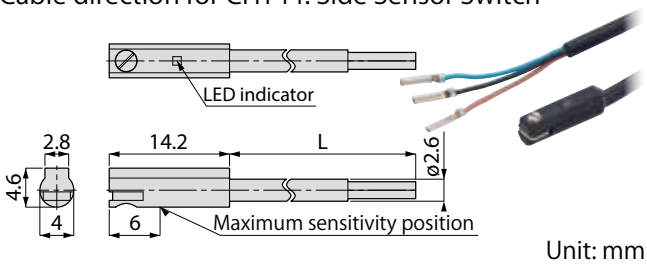

Unit: mm

Model code	Weight (g)		Price (￥)	
	5 : -C100	5 : -C200	5 : -C100	5 : -C200
SEM-FD5	13	24	2,600	2,600
SEM-FN5				
SEM-FP5				

Sensor switch setting example and installation position setting procedure

The sensor switch can be used in a variety of ways depending on the combination of installing quantity and detection position.

〈Installation〉

Insert the sensor switch into the sensor switch installing slot from the direction shown below.

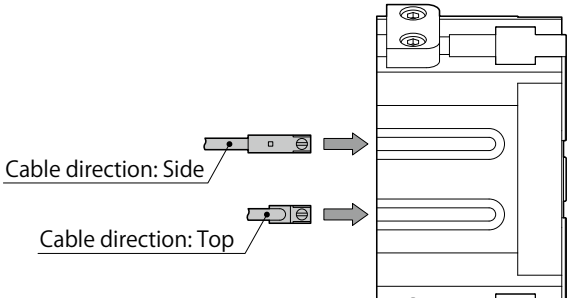

〈Setting ①〉

1. To confirm the outside gripping of work-piece

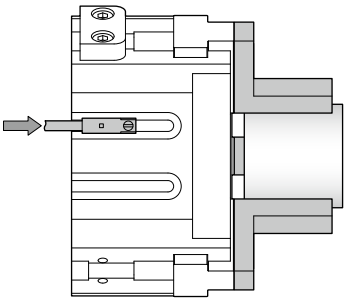

A LED turns on as sliding the sensor switch along the slot toward arrowed direction.

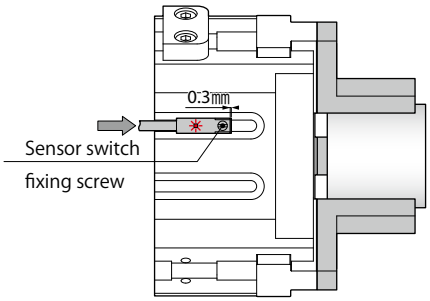

Slide the sensor switch 0.3mm further toward arrowed direction from the position the LED turns on, and fix it with a sensor switch fixing screw. (Tightening torque: 0.1 - 0.2N·m)

2. To confirm the inside gripping of work-piece

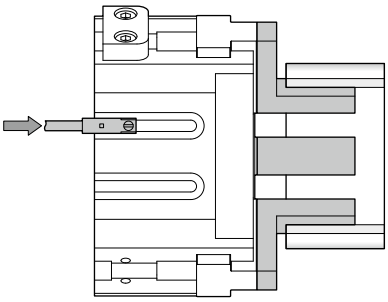

A LED turns on as sliding the sensor switch along the slot toward arrowed direction. Slide it further until LED turns off.

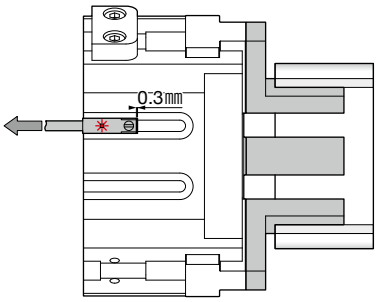

Slide back the sensor switch toward arrowed direction until LED turns on again. Slide the sensor switch 0.3mm further toward arrowed direction from the position the LED turns on, and fix it with a sensor switch fixing screw. (Tightening torque: 0.1 - 0.2N·m)

〈Setting ②〉

To confirm the gripper is fully open

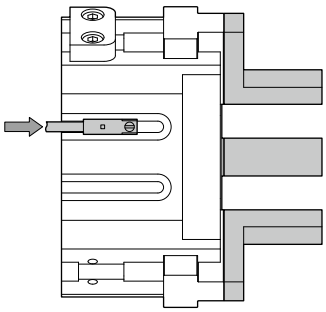

A LED turns on as sliding the sensor switch along the slot toward arrowed direction. Slide it further until LED turns off.

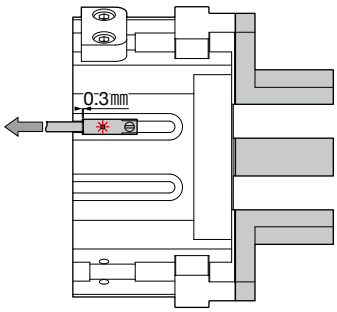

Slide back the sensor switch toward arrowed direction until LED turns on again. Slide the sensor switch 0.3mm further toward arrowed direction from the position the LED turns on, and fix it with a sensor switch fixing screw. (Tightening torque: 0.1 - 0.2N·m)

〈Setting ③〉

To confirm the work-piece is not gripped

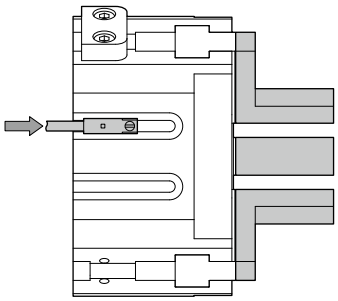

A LED turns on as sliding the sensor switch along the slot toward arrowed direction.

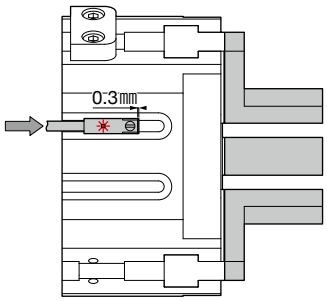

Slide the sensor switch 0.3mm further toward arrowed direction from the position the LED turns on, and fix it with a sensor switch fixing screw. (Tightening torque: 0.1 - 0.2N·m)

Installation of proximity sensor

- A gripper has 2 slots for proximity sensor. See the table below for installable sensor size. Proximity sensor is not included in the sensor option.

Model code	Installable sensor size
CHT34-D	Cylindrical type ø3mm
CHT44-D	Screw type M8

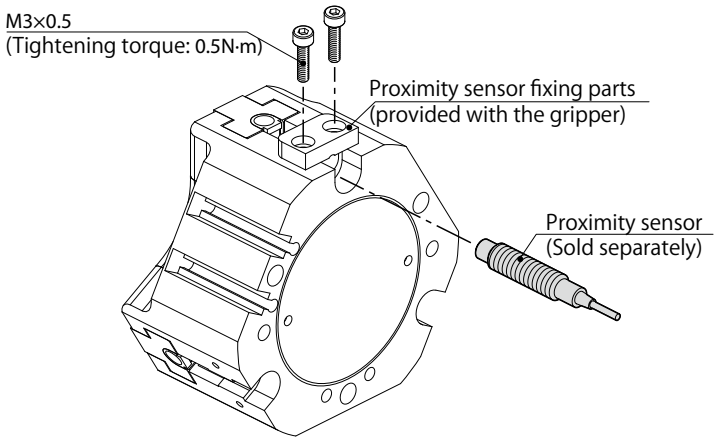

Mounting Flange for EOAT (non-standard item)

Exterior dimensional drawings

Mounting flange for 34mm cylinder I.D. (gripper type: CHT34-D)

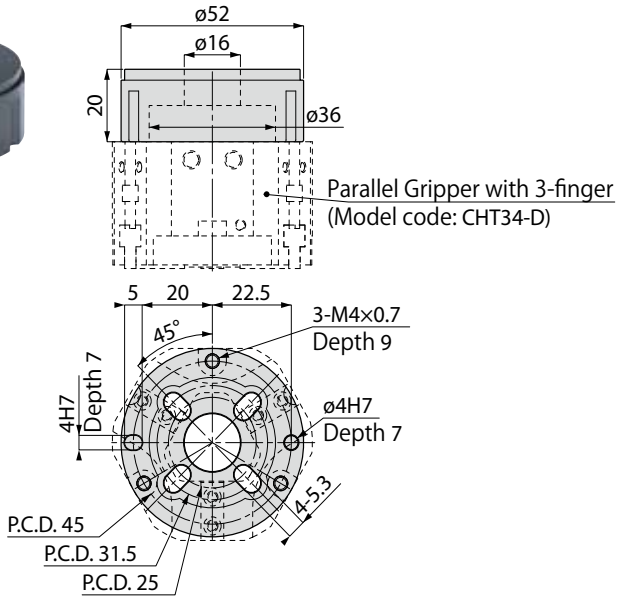

Unit: mm

Model code	Weight (g)	Price (¥)
HSC-CHT34	100	Discretionary

Sample image of installation on a robot (illustration purposes only)

Supplied screws

- M5×15 (4 pieces): Hexagon socket head bolts for EOAT mounting flange (to be used when the pitch of mounting hole is P.C.D. 25 or P.C.D. 31.5)
- M4×30 (3 pieces): Hexagon socket head bolts for Parallel Gripper with 3-finger

Mounting flange for 44mm cylinder I.D. (gripper type: CHT44-D)

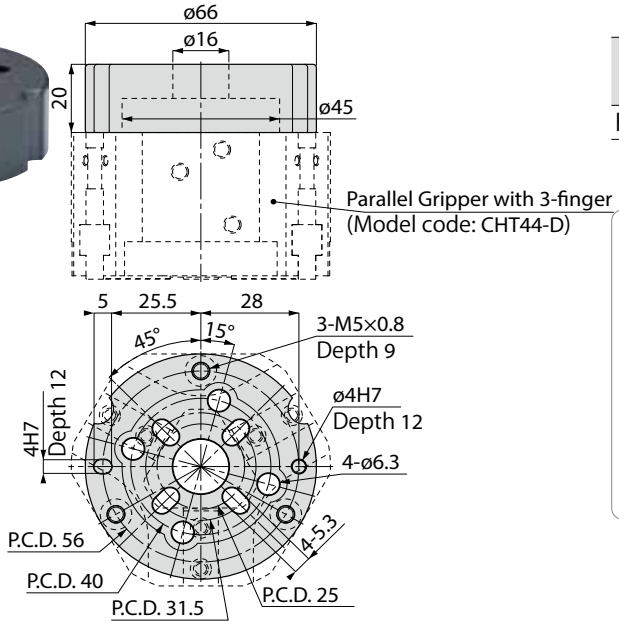

Unit: mm

Model code	Weight (g)	Price (¥)
HSC-CHT44	180	Discretionary

Sample image of installation on a robot (illustration purposes only)

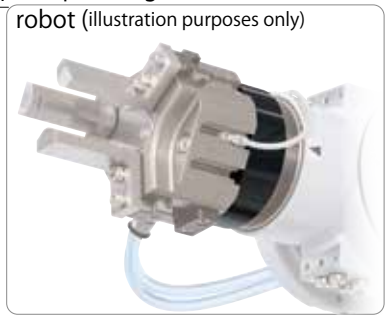

Supplied screws

- M6×15 (4 pieces): Hexagon socket head bolts for EOAT mounting flange (to be used when the pitch of mounting hole is . 40)
- M5×15 (4 pieces): Hexagon socket head bolts for EOAT mounting flange (to be used when the pitch of mounting hole is . 25 or P.C.D. 31.5)
- M5×35 (3 pieces): Hexagon socket head bolts for Parallel Gripper with 3-finger

PISCO
>>>https://www.pisco.co.jp/en

OVERSEAS SALES DEPARTMENT (HQ)	TEL. +81-(0)265-76-7751	FAX. +81-(0)265-76-3305	e-mail. intl@pisco.co.jp
PISCO TAIWAN CO., LTD.	TEL. +886-(0)6-726-5762	FAX. +886-(0)6-726-5752	e-mail. P8638@ms16.hinet.net
NIHON PISCO TAIWAN CO., LTD	TEL. +886-(0)6-726-4520	FAX. +886-(0)6-726-1526	
PISCO USA, INC.	TEL. +1-630-993-3500		e-mail. inquiry@pisco.com
PISCO KOREA CO., LTD	TEL. +82-32-327-9795	FAX. +82-32-327-0385	e-mail. webmaster@pisco.co.kr
PISCO VIETNAM CO., LTD	TEL. +84-24-3200-0310	FAX. +84-24-3200-5331	e-mail. piscovn@pisco-vn.com
NIHON PISCO CO., LTD. SHANGHAI REPRESENTATIVE OFFICE	TEL. +86-21-31332623		e-mail. ribenpisco@gmail.com
NIHON PISCO CO., LTD. BANGKOK REPRESENTATIVE OFFICE	TEL. +66-(0)2-612-7366	FAX. +66-(0)2-612-7399	e-mail. piscobkk@pisco.co.jp

2021.06.6,000RS